READY TO KNOW
THE UNKNOWN
IN THE CHEMICAL WORLD,
OMAL IS WITH YOU.
WWW.OMAL.COM

Specialists in
valves and **actuators**
since 1981.

THE CHEMICAL SERIES

PROCHEMIE

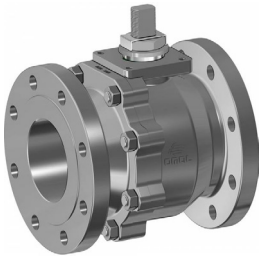

THOR
CASTING STAINLESS STEEL

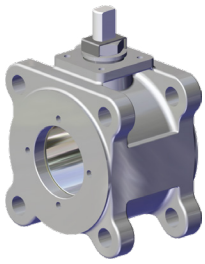

MAGNUM
CASTING STAINLESS STEEL

MAGNUM
WAFER

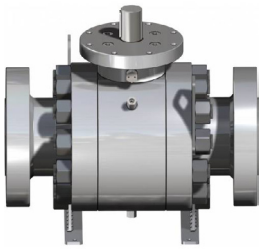

SUPREME

ITEM 424

ARES

AGO
PNEUMATIC ACTUATORS

RACKON
PNEUMATIC ACTUATORS

HEAVY DUTY
PNEUMATIC ACTUATORS

SPECIAL EXECUTIONS

TANK BOTTOM

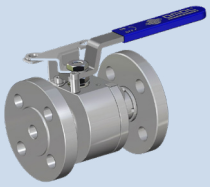

REVOLVING FLANGE

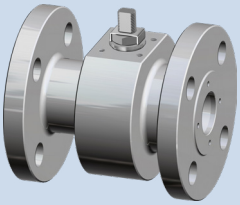

ONE-PIECE BODY

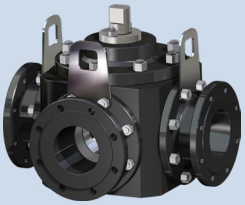

TRUNNION 3 WAY

APPLICATIONS

PAINTING

PETROCHEMICAL

PHARMACEUTICAL

PROCESS INDUSTRY

TECHNICAL DETAILS

PROCHEMIE

SPLIT BODY BALL VALVES FOR CHEMICAL INDUSTRY

SPECIFICATIONS

Size:
- DN 15 ÷ DN 150 [mm]
- 1/2” ÷ 6” [inch]

Body material:
- 1.4408 Stainless steel

Available seats:
- PTFE Modified
- PTFE Glass filled
- PTFE Carbon filled
- Devlon
- PEEK

End connections:
- Flanged RF

Pressure class:
- PN 16-40

Options:
- Mono-directional ball
- Locking device
- Stem Extension
- Oxygen use (on request)

Certifications:
- Ex CE/UKCA
- Pressure Equipment CE/ UKCA
- AD2000 HP0 / A4
- TA Luft 60000 cycles
- Fugitive Emission
- Fire Safe
- SIL (up to SIL3)

THOR

SPLIT BODY CASTING STAINLESS STEEL BALL VALVES

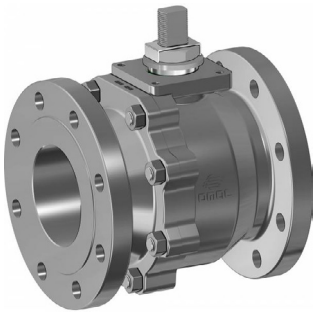

SPECIFICATIONS

Size:
- DN 15 ÷ DN 200 [mm]
- 1/2” ÷ 8” [inch]

Body material:
- CF8M s.s. CL 150-300

End connections:
- Flanged RF (on request)

Pressure class:
- ANSI 150-300

Options:
- Locking device
- Stem Extension

Certifications:
- Ex CE/UKCA
- Pressure Equipment CE/ UKCA
- TPED
- SIL (up to SIL3)
- Fugitive Emission rate A
- Fire Safe

MAGNUM

CASTING SPLIT WAFER BALL VALVES

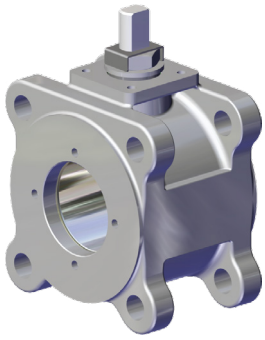

SPECIFICATIONS

Size:
- DN 25 ÷ DN 100 [mm]
- 1” ÷ 4” [inch]

Body material:
- CF8M Stainless steel

Available seats:
- PTFE Modified
- PTFE Glass filled
- PTFE Carbon filled
- PEEK

End connections:
- Flanged RF

Pressure class:
- DN≤40; PN 16-40
- DN≥50; PN 16

Options:
- Mono-directional ball
- Locking device
- Stem Extension
- Bottom tank
- Oxygen use (on request)
- Hydrogen use (on request)

Certifications:
- Ex CE/UKCA
- Pressure Equipment CE/ UKCA
- SIL (up to SIL3)
- TA Luft & Fugitive Emission
- Fire Safe

MAGNUM

WAFER BALL VALVES

SPECIFICATIONS

Size:
- DN 15 ÷ DN 100 [mm]
- 1/2” ÷ 4” [inch]

Body material:
- A105 Carbon steel
- 316 Stainless steel

Available seats:
- PTFE Modified
- PTFE Glass filled
- PTFE Carbon filled
- PEEK

End connections:
- Flanged RF

Pressure class:
- ANSI 150-300; PN 16-40

Options:
- Mono-directional ball
- Locking device
- Stem Extension
- Bottom tank
- Oxygen use (on request)
- Hydrogen use (on request)

Certifications:
- Ex CE/UKCA
- Pressure Equipment CE/ UKCA
- SIL (up to SIL3)
- TA Luft & Fugitive Emission
- Fire Safe

SUPREME

TRUNNION BALL VALVES

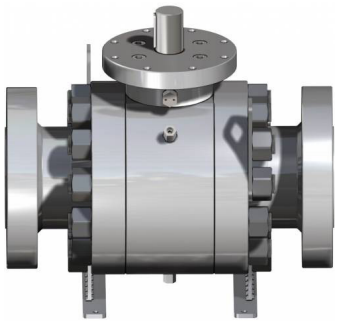

SPECIFICATIONS

Size:
- DN 50 ÷ DN 600 [mm]
- 2” ÷ 24” [inch]

Body material:
- Carbon steel
- Stainless steel

Available seats:
- RPTFE
- Devlon
- PEEK

End connections:
- Flanged RF / RTJ

Pressure class:
- ANSI 150-2500 (varied by size)

Options:
- BW / SW connection

Certifications:
- Ex CE/UKCA
- Pressure Equipment CE/ UKCA
- Fire Safe
- SIL (up to SIL3)
- Fugitive Emission
- API6D on request

ITEM 424

3 PIECES STAINLESS STEEL BALL VALVES

SPECIFICATIONS

Size:
- DN 8 ÷ DN 100 [mm]
- 1/4” ÷ 4” [inch]

Body material:
- CF8M / 1.4408 Stainless steel

Available seats:
- PTFE Modified
- PTFE Glass filled
- PTFE Carbon filled

End connections:
- ISO 7/1
- NPT (ANSI B1.20.1)

Max pressure:
- PN 63
- 913 PSI

Options:
- BW / SW connection
- Oxygen use (on request)

Certifications:
- Ex CE/UKCA
- Pressure Equipment CE/ UKCA

ARES

PNEUMATIC ANGLE SEAT VALVES

SPECIFICATIONS

Size:
- DN 15 ÷ DN 50 [mm]
- 3/8” ÷ 2” [inch]

Body material:
- Stainless steel

Available seats:
- PTFE Modified
- FKM
- NBR
- EPDM

End connections:
- NPT (ANSI B1.20.1)
- ISO 7/1
- ISO 228-1
- Flanged (PN 16 - ANSI 150)
- Weld ends
- Clamp

Max pressure:
- PN 16 - PN 25
- 230 - 360 PSI

Variations:
- Double acting
- Spring return N.C. - N.O.
- Manual operated

Options:
- Oxygen use (on request)
- Namur plate
- Limit switch box

Certifications:
- Ex CE/UKCA
- Pressure Equipment CE/ UKCA

AGO

ALUMINIUM PNEUMATIC ACTUATORS

SPECIFICATIONS

Type:
- Scotch yoke

Nominal torque:
- DA (Double acting):
  8 Nm ÷ 8000 Nm
  70 in-lbs ÷ 70806 in-lbs
- SR (Spring return):
  15 Nm ÷ 4000 Nm
  133 in-lbs ÷ 35403 in-lbs

Size:
- DA 8 ÷ DA 8000
- SR 15 ÷ SR 4000

Body material:
- Aluminium

Variations:
- Double acting
- Spring return N.C. - N.O.

Options:
- Low temp. version:
  -50°C / -58°F
- High temp. version:
  +150°C / +302°F
- Adjustable rotation
- Surface treatments

Certifications:
- Ex CE/UKCA
- SIL (up to SIL3)

RACKON

RACK & PINION PNEUMATIC ACTUATORS

SPECIFICATIONS

Type:
- Rack & Pinion

Nominal torque:
- DA (Double acting):
  10 Nm ÷ 474 Nm
  88 in-lbs ÷ 4195 in-lbs
- SR (Spring return):
  15 Nm ÷ 347 Nm
  133 in-lbs ÷ 3071 in-lbs

Size:
- DA: RK 10 ÷ RK 480
- SR: RK 20 ÷ RK 480

Body material:
- Aluminium

Variations:
- Double acting
- Spring return N.C. - N.O.

Options:
- GAS or NPT namur plate
- Low temp. version:
  -50°C / -58°F
- High temp. version:
  +150°C / +302°F
- Adjustable rotation
- Accessories

Certifications:
- Ex CE/UKCA
- SIL (up to SIL3)

HEAVY DUTY

HEAVY DUTY PNEUMATIC ACTUATORS

SPECIFICATIONS

Type:
- Scotch yoke

Nominal torque:
- 2000 Nm ÷ 32000 Nm
  17700 in-lbs ÷ 283224 in-lbs

Size:
- 085 - 100 - 130

Body material:
- Carbon steel

Variations:
- DA: Double acting
- SR: Spring return N.C. - N.O.

Options:
- Manual hydraulic override
- Special painting

Certifications:
- Ex CE/UKCA
- SIL (up to SIL3)

THE CHEMICAL SERIES

SPECIAL EXECUTIONS

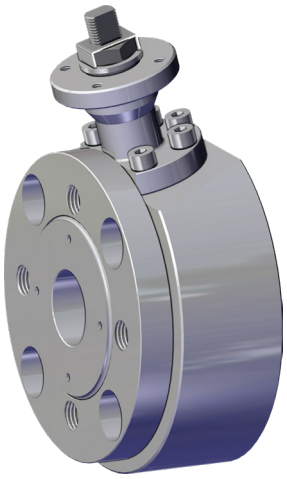

TANK BOTTOM

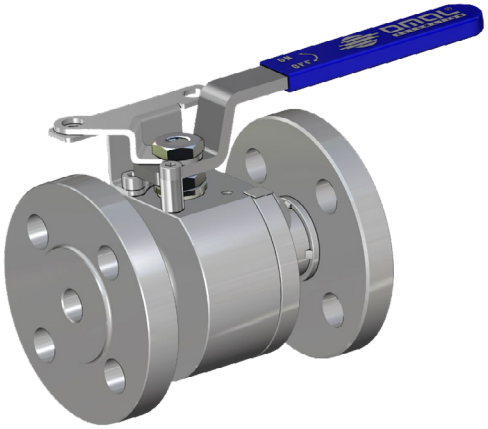

REVOLVING FLANGE

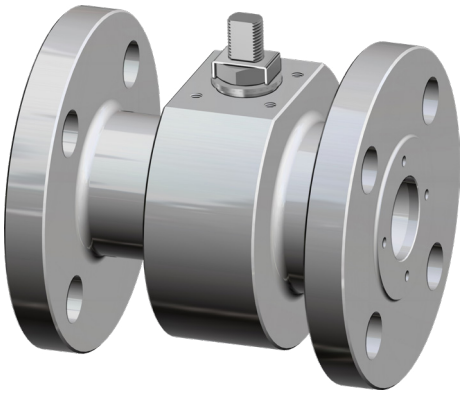

ONE-PIECE BODY

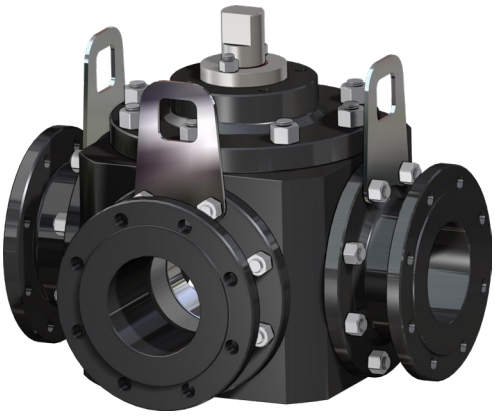

TRUNNION 3 WAY

Our history

Other applications

Sustainability

OMAL S.p.A. Società Benefit

Headquarter Via Ponte Nuovo, 11 - 25050 Rodengo Saiano (BS), Italy
Production Site Via Brognolo, 12 - 25050 Passirano (BS), Italy
Ph. +39 030 8900145 · Fax +39 030 8900423 · info@omal.it

OMAL USA Corp.

1835 Airport Exchange Blvd, Suite 100- 41018 Erlanger, (Kentucky), USA
Ph. +1 (859) 900-2108 · info@omal.com

OMAL Asia Pacific Ltd.

26/73, Moo 7, Racha Thewa Sub-district, Bang Phli District,
Samut Prakan Province, (Bangkok), Thailand
Ph. 02-117-1188 · info@omal.co.th

www.omal.com

UIMC2025 - 02/26